Reprinted with permission from American Laboratory, Vol. 7, No. 11, pp. 100-101.

Microcomputer I/O devices

By David G. Larsen, Peter R. Rony, and Jonathan A. Titus

IN THE DISCUSSION of the structure of a microcomputer, we described the various data paths in a microcomputer, including data input, data output, external device addressing, in and out function pulses, and interrupt signals. These are the vital lines of communication between the microcomputer and the "outside world," i.e., those signal lines that are necessary to interface the microprocessing unit (MPU) to the input/output (I/O) devices that you would like to control.

I/G devices

Some useful definitions pertaining to I/O devices are given in the table. The traditional view of an I/O device is that it is somewhat large or complex. Card readers, magnetic tape units, cathode-ray tube displays, and Teletypes certainly fit such a description. However, a single integrated circuit chip, such as a latch, shift register, counter, or small memory, can also be considered an I/O device to a computer.

Another important point is that several device select pulses (synchronization pulses) may be required to interface a single I/O device. For example, a 74198 shift register has a pair of control inputs that determine whether the register shifts left, shifts right, or parallel-loads eight bits of data. This chip also has a clock input and a clear input. Thus, a single 74198 chip, when serving as an output device, may require up to four device select lines from the microcomputer. Therefore, the fact that we can generate 256 different input and 256 different output device select pulses does not necessarily mean that we can address 512 different "devices." A more reasonable number is of the order of 50 to 100 different devices.

Device select pulses are inexpensive and easy to implement. We encourage their use as often as possible as you attempt to substi-

Computer interfacing	The synchronization of digital data transmrssron between a computer and one or more external input/output devices"
Input-output, input/output	General term for the equipment used to communicate with a computer and the data involved in the communication[1]
I/O	Abbreviation for input-output'
I/O device	Input/output device; any digital device, including a single integrated circuit chip, that transmits data to or receives data or strobe pulses from a computer (The in and out functions are always referenced to the computer.)[3]
Synchronization pulses	Pulses originated by the transmitting equipment and introduced into the receiving equipment to keep the equipment at both locations operating in step'
Synchronous	In step or in phase, as applied to two devices or machines; a term applied to a computer, in which the performance of a sequence of operations is controlled by equally spaced clock signals or pulses? ; at the same time
Synchronous computer	A digital computer in which all ordinary operations are controlled by equally spaced signals from a master clock'
Synchronous operation	Operation of a system under the control of clock pulses?
To synchronize	To lock one element of a system into step with another'

Mr. Larsen, Department of Chemistry, and Dr. Rony, Department of Chemical Engineering, are with the Virginia Polytechnic Institute and State University. Mr. Titus is with Tychon, Inc.

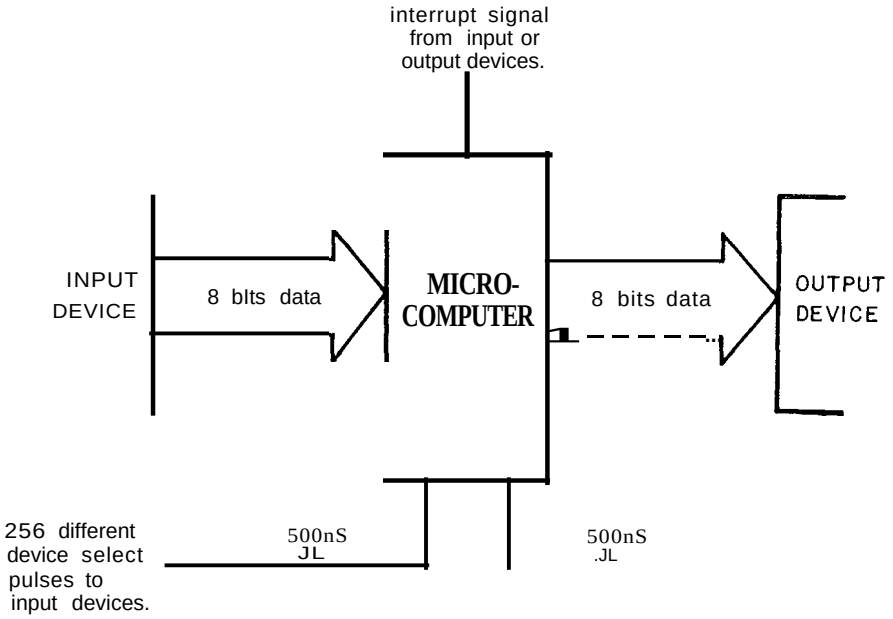

Figure 1 *The I/O and control data paths in an 8080 microcomputer.*

tute computer software, i.e., microcomputer programs, for integrated circuit chip hardware. We shall repeat this theme often: software vs hardware. There exists a trade-off between the two, but the main objective in using microcomputers will usually be to substitute software for hardware. In doing so, the only penalty is time; i.e., it takes time to execute computer instructions. If you can accept the delays inherent in computer programs, then the circuitry required to accomplish a specific interfacing task can be vastly simplified.

Interfacing

Interfacing can be defined as the joining of instruments in such a way that they are able to function in a compatible and coordinated fashion.* By compatible and coordinated fashion, we usually mean synchronized. Some important definitions are given in the table.

Although the details of computer interfacing vary with the type of computer employed, the general principles of interfacing apply to a wide variety of computers. Such principles include the following:

1. The digital data that are transmitted between a computer and an I/O device are either individual clock pulses or else full data words.

2. The computer and the input/output device are both clocked devices. At the very least, the I/O device has a single flip-flop that is set or reset by the computer. All data transmission operations are synchronized to the internal clock of the computer.

3. The computer sends synchronization pulses (device select pulses) to the I/O device. These pulses are generated by the computer program; i.e., they are software-generated, and are usually quite short: for an 8080 microcomputer operating at 2 MHz, they last only 500 nsec. *They synchronize and select at the same instant.*

4. Individual device select pulses are sent to individual input or output devices. This is called *external device addressing.* The pulses are used for latching data output and strobing data input.

S. Computer program operation can be interrupted by the transmission of a clock pulse from an I/O device to a special input line to the computer. This is called *interrupt generation.* Upon being interrupted by an external I/O device, the computer goes to a computer subroutine that responds to, or *services,* the interrupt.

6. Full data words can be output from, or input into, the accumulator register. For the 8080 microcomputer, a full data word contains eight bits. Output data from the accumulator are available for only a very short period of time, and usually must be latched. Input data into the accumulator are acquired over a very short period of time, and usually must be strobed into the accumulator.

As shown in *Figure* 1, which summarizes these comments, interfacing basically consists of synchronizing parallel input or output data by use of the 512 device select pulses.

Hardware is required to tie the MPU to the external device and is just as important as the microcomputer software. We shall tackle both of these facets of microcomputer interfacing in detail in subsequent columns. In the next column, we shall provide a simple microcomputer program that generates device select pulses to turn a device such as a fan or a heater on and off.

*C.L. Garfinkel of Keithley Instruments, Inc. is the originator of this definition.

References

1. *Microprogramming Handbook* (Microdata Corporation, Santa Ana, 197 1).

2. GRAF, RUDOLF F., *Modern Dictionary of Electronics* (Howard W. Sams and Company, Inc., Indianapolis, 1972).

3. *Bugbook III. Microcomputer Interfacing, Experiments Using the Mark 80, an 8080 System* (E & L Instruments, Derby, Conn., 1975).